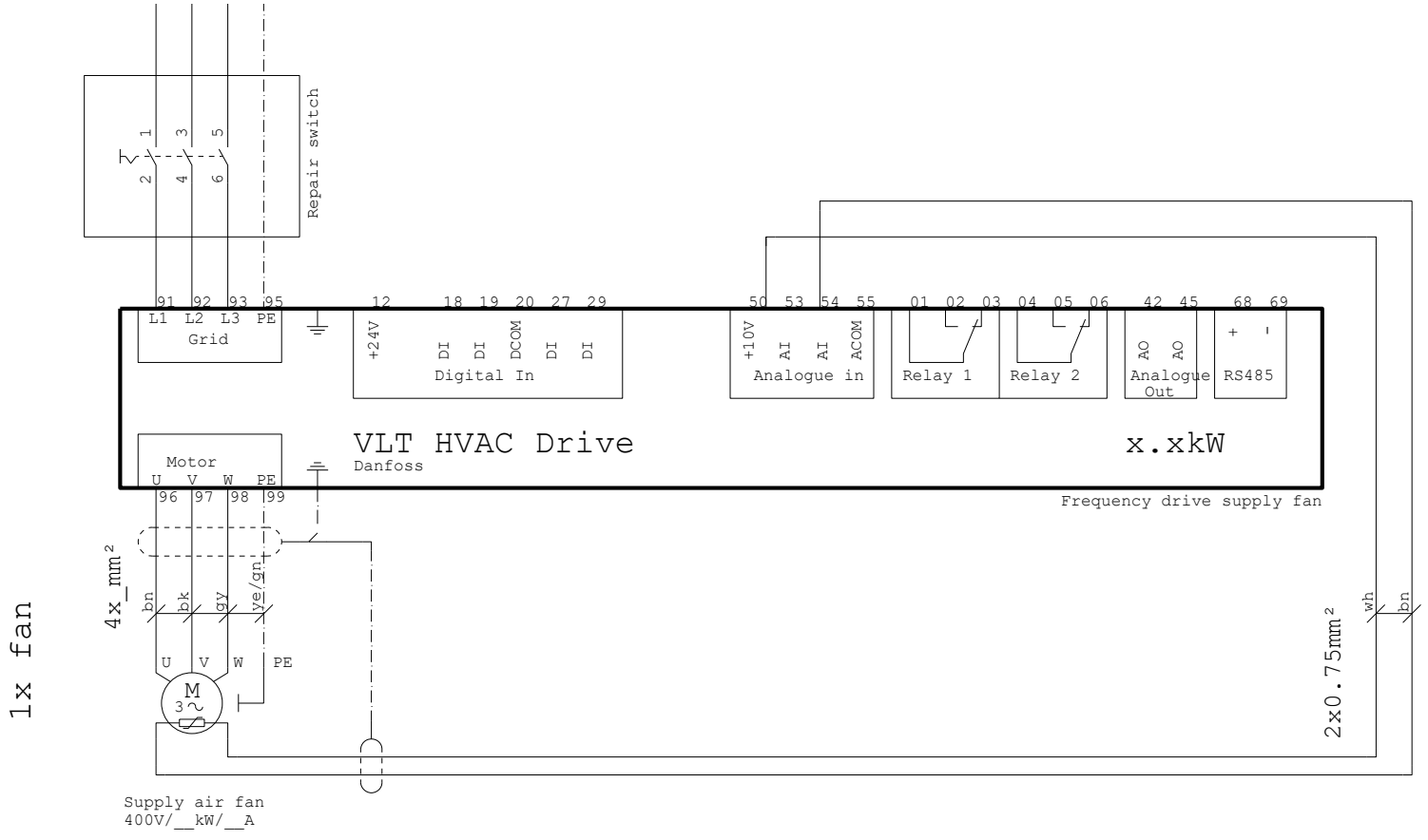

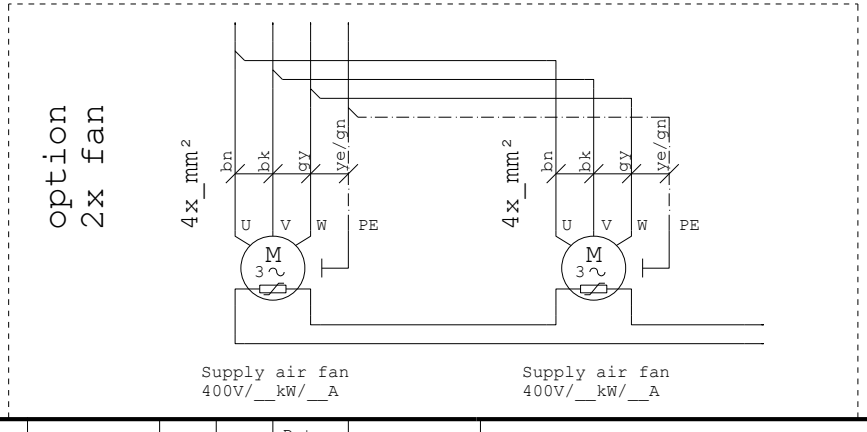

Legend

White	1	WH
Brown	2	BN
Green	3	Gn
Yellow	4	YE
Grey	5	GY
Pink	6	PK
Blue	8	BL
Red	10	RD
Black	11	BK
Violet	12	VI

				Date	07.03.23			FU	Position	=
				Draw.	wscad01					+
				Check					Project pages Total 241 actual 33	Sheet 15 von 35Bl.
Status	rev.	Date	Nom	Norm						