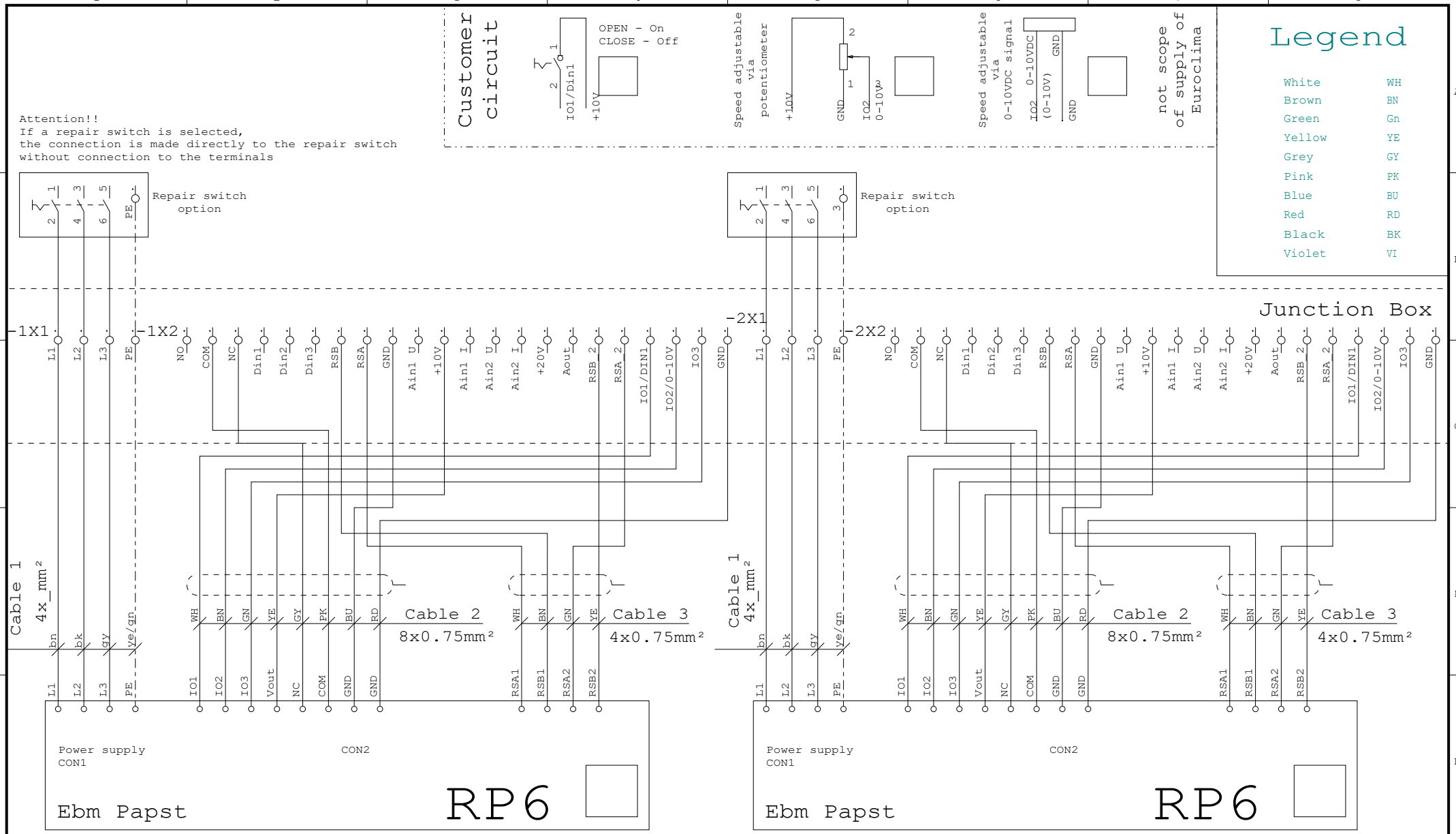

For more information - see datasheet of EBM Papst

				Date	26.03.20	euroclima We care for better air...	2x Fan RP6	Position	=
				Draw.	MaWi				+
				Check				Project pages Total 54 actual 48	Sheet 48
Status	rev.	Date	Nom	Norm					von 54 Bl.