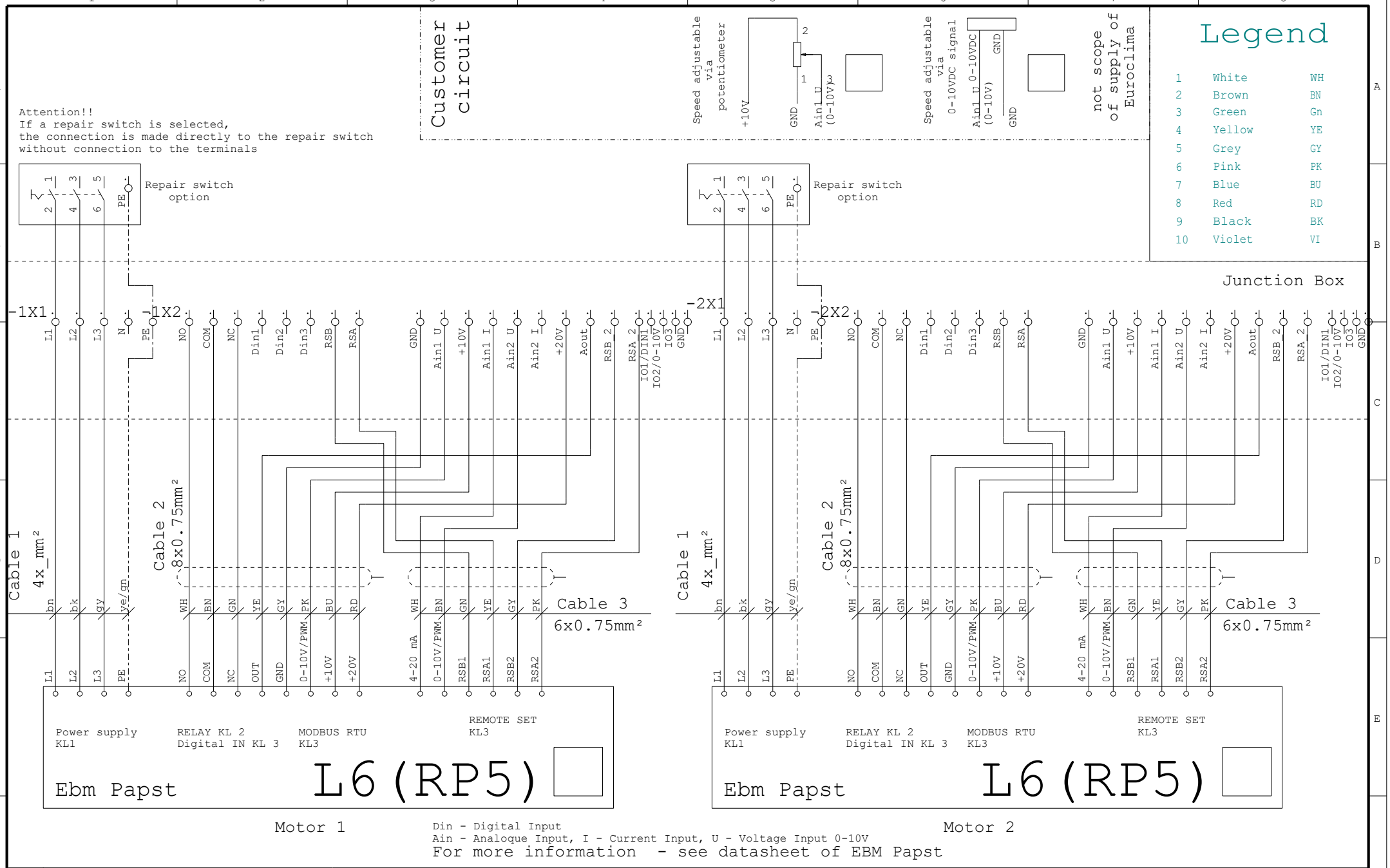
Customer circuit
Speed adjustable via potentiometer
+10V
GND
Ain1_U (0-10V)
Speed adjustable via 0-10VDC signal
Ain1_U 0-10VDC (0-10V)
GND
not scope of supply of Euroclima
Legend
1 White WH
2 Brown BN
3 Green Gn
4 Yellow YE
5 Grey GY
6 Pink PK
7 Blue BU
8 Red RD
9 Black BK
10 Violet VI
Attention!!
If a repair switch is selected,
the connection is made directly to the repair switch
without connection to the terminals
Repair switch option
Repair switch option
Junction Box
-1X1
-1X2
-2X1
-2X2
L1 L2 L3 N PE
NO COM NC Din1 Din2 Din3 RSB RSA
GND Ain1 U +10V Ain1 I Ain2 U Ain2 I +20V Aout RSB 2 RSA 2 IO1/DIN1 IO2/0-10V IO3 GND
Cable 1
4x mm²
Cable 2
8x0.75mm²
Cable 3
6x0.75mm²
bn bk gy ye/gn
WH BN GN YE GY PK BU RD
L1 L2 L3 PE
NO COM NC OUT GND 0-10V/PWM +10V +20V
4-20 mA 0-10V/PWM RSB1 RSA1 RSB2 RSA2
Power supply KL1
RELAY KL 2 Digital IN KL 3
MODBUS RTU KL3
REMOTE SET KL3
Ebm Papst
L6 (RP5)
Motor 1
Motor 2
Din - Digital Input
Ain - Analoque Input, I - Current Input, U - Voltage Input 0-10V
For more information - see datasheet of EBM Papst
Date 26.03.20
Draw. MaWi
Check
Status rev. Date Nom Norm
euroclima
We care for better air...
2x Fan L6 - RP5
Position
Project pages
Total 151
actual 50
Sheet 50
von 151Bl.